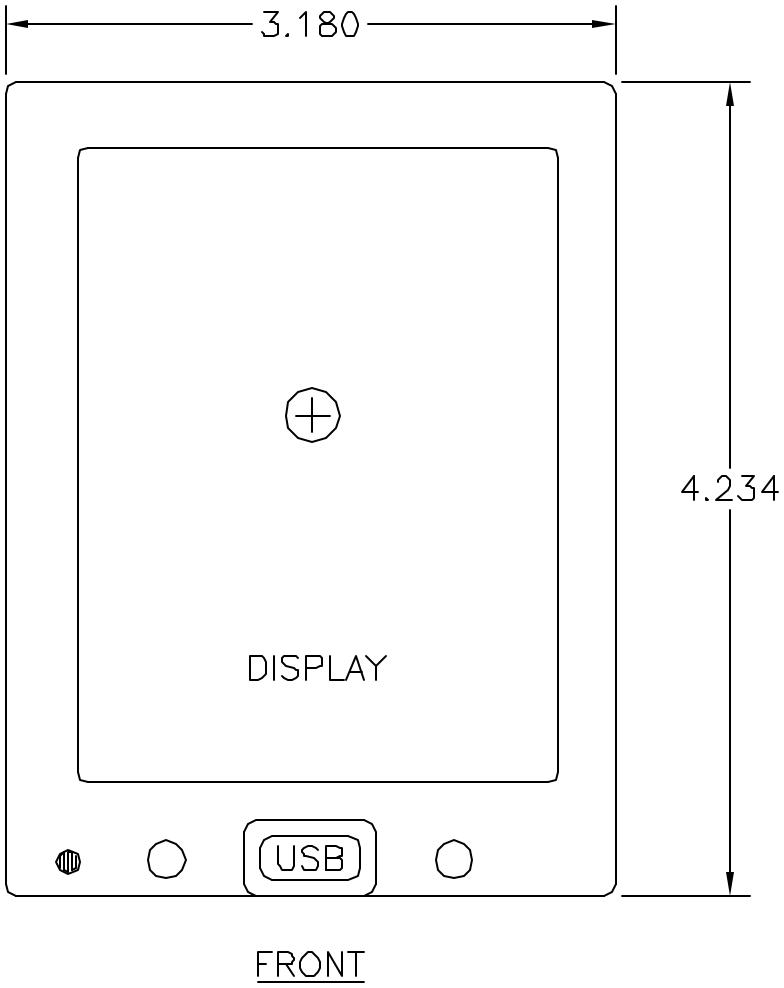

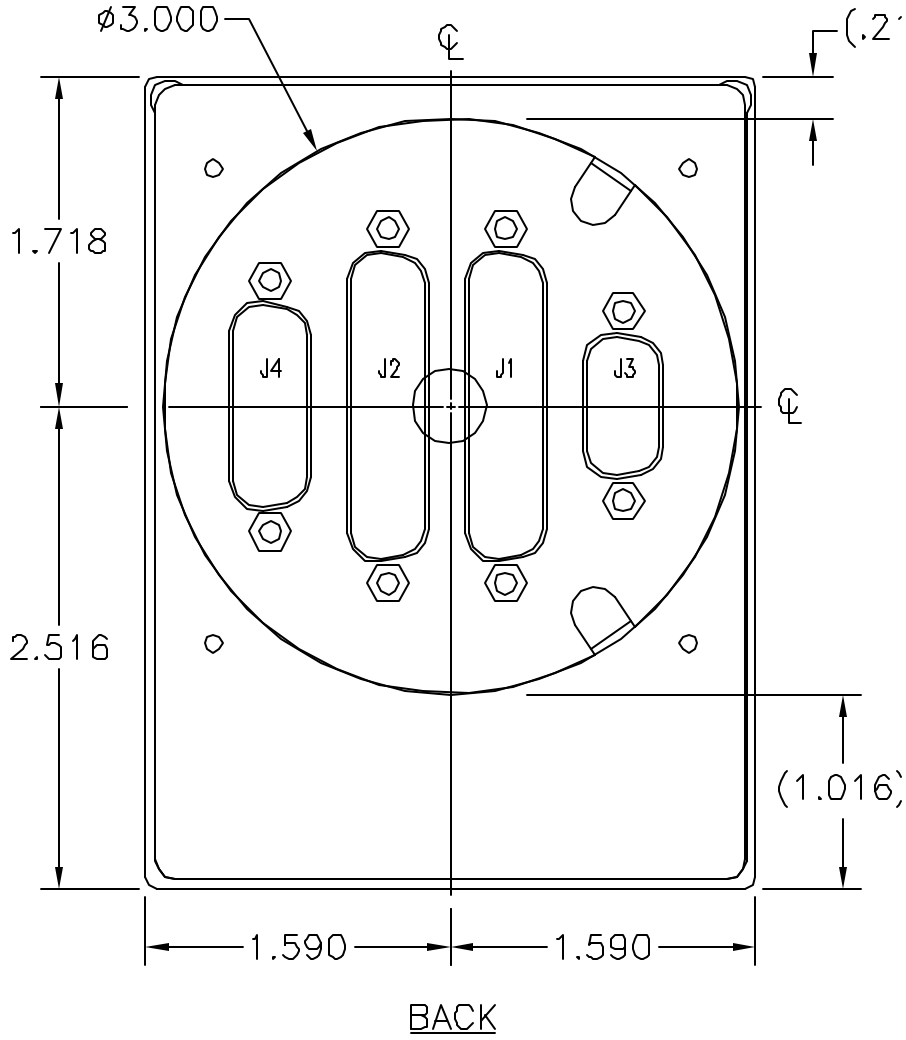

EDM-730/830 PROFILE